1 MUFFLER ASSY./TANK,FUEL

GVH-7600S-BAA

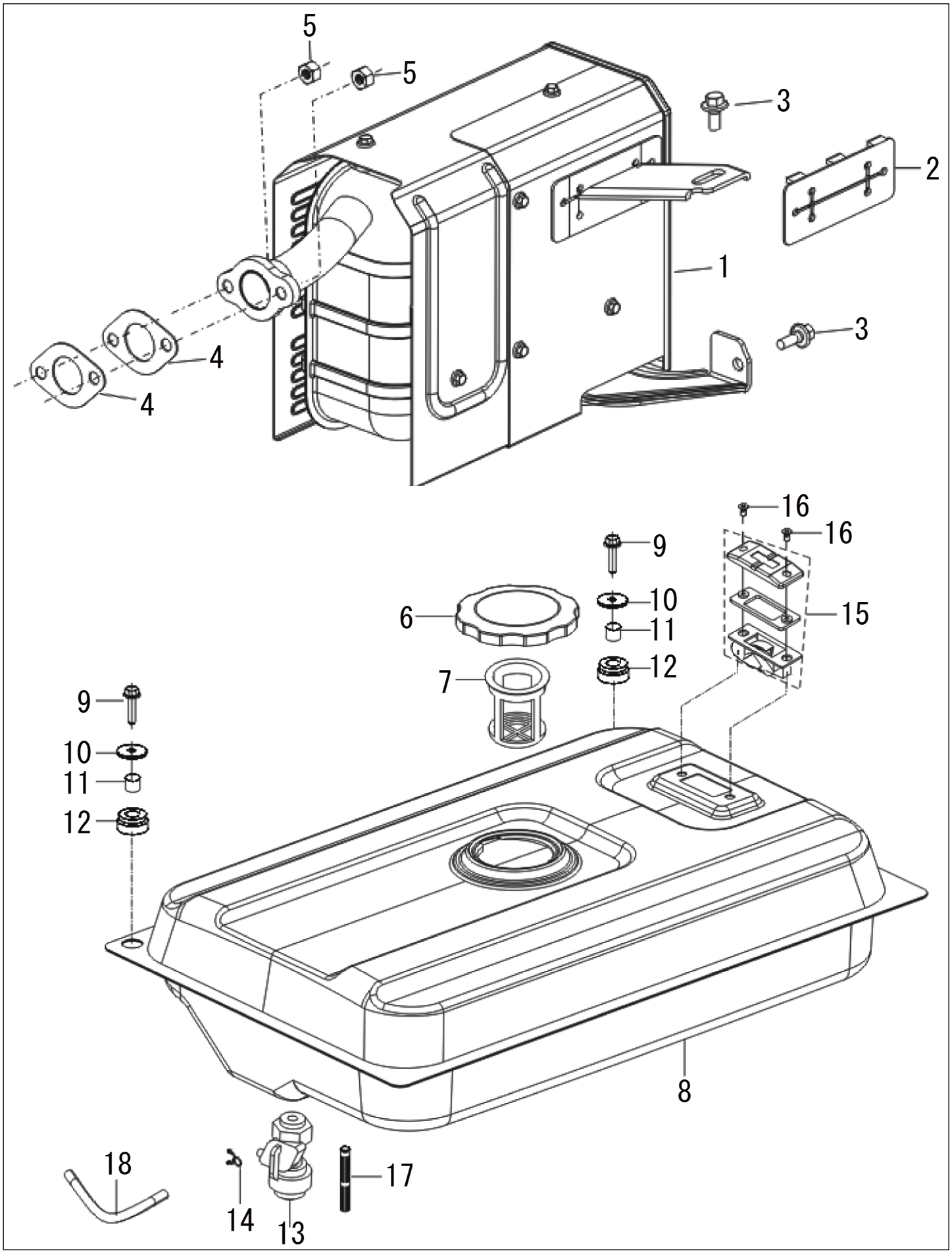

1 MUFFLER ASSY./TANK,FUEL

GVH-7600S-BAA

No.	PARTS CODE	PARTS NAME	QTY	MATERIAL/SIZE	REMARKS
1	100147901	MUFFLER ASSEMBLY	1		
2	100047301	RUBBER GASKET,MUFFLER	1		
3	100047201	BOLT	2		
4	100050901	GASKET,EXHAUST OUTLET	2		
5	100000071	NUT	1		
6	100047402	COVER,FUEL TANK	1		
7	100047501	FUEL FILTER	1		
8	100051003	TANK,FUEL	1		
9	100042201	BOLT	2		
10	100051101	WASHER	2		
11	100047801	BUSH	2		
12	100047901	SLEEVE,FUEL TANK RUBBER	2		
13	100144301	VALVE,FUEL SHUT OFF	1		
14	100007701	CLAMP	1		
15	100048102	FUEL GAUGE	1		
16	100048201	SCREW	2		
17	100144401	FUEL FILTER	1		
18	100051201	RUBBER HOUSE	1		

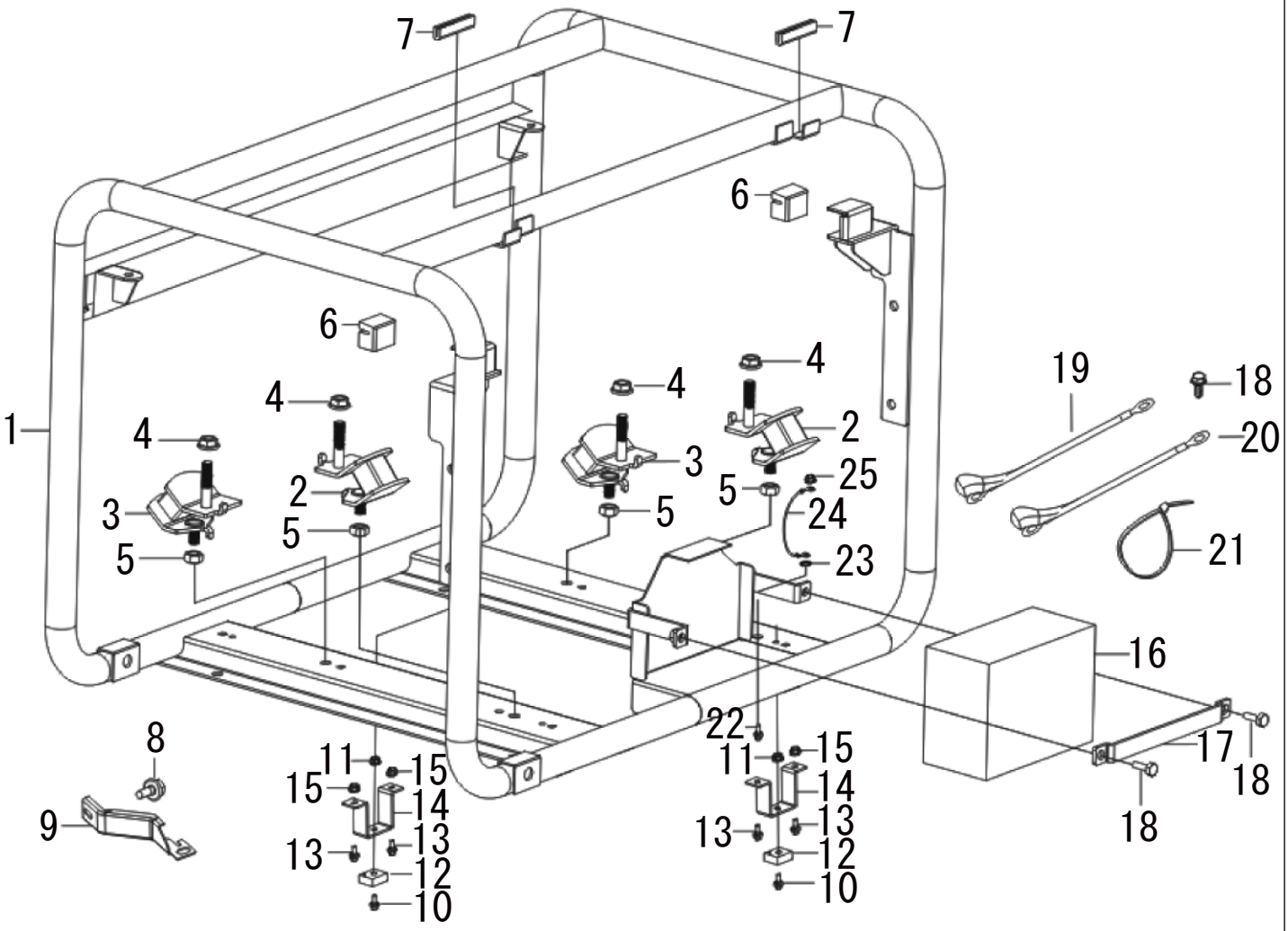
7
7
6
6
4
4
4
4
1
2
2
3
3
5
5
5
5
25
24
23
19
18
20
21
16
17
18
18
8
9
11
15
15
14
13
13
12
10
22
11
15
14
13
13
12
10

2 FRAME

GVH-7600S-BAA

No.	PARTS CODE	PARTS NAME	QTY	MATERIAL/SIZE	REMARKS
1	100145301	FRAME ASSY,ENGINE	1		
2	065044102	CUSHION,ENGINE FRAME	2		
3	065044202	CUSHION,ENGINE FRAME REAR	2		
4	100137101	NUT	4		
5	100060001	NUT	4		
6	065039701	CUSHION,ENGINE FUEL TANK	2		
7	065039801	SLEEVE,RUBBER	2		
8	100000501	BOLT	1		
9	100077201	BRACKET,AIR CLEANER	1		
10	100006101	BOLT	2	M6X16	
11	100006901	NUT	2	M6	
12	065044501	SEAT,FRAME	2		
13	100047201	BOLT	4		
14	065048801	BRACKET,SEAT,FRAME	2		
15	100137101	NUT	3		
16	065044601	BATTERY	1		
17	065044701	PLATEN,BATTERY	1		
18	100040001	BOLT	3		
19	100145401	POSITIVE WIRE	1		
20	065044902	CATHODE WIRE	1		
21	065047201	BAND	1		
22	100040001	BOLT	1		
23	100144501	WASHER	1		
24	100145501	EARTH WIRE	1		
25	100118701	NUT	1		

3 PANEL SUBASSEMBLY,CONTROL

GVH-7600S-BAA

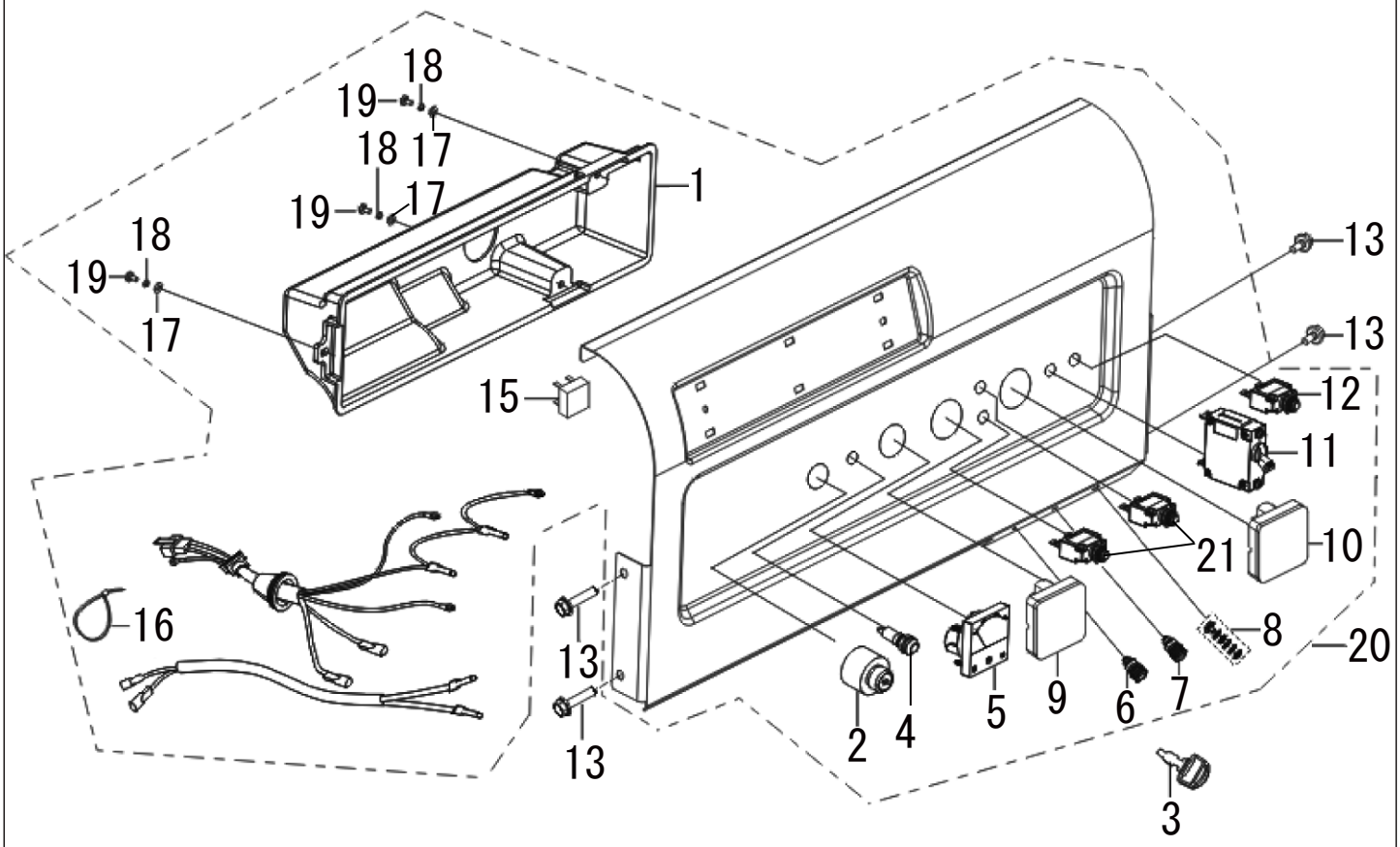

3 PANEL SUBASSEMBLY,CONTROL

GVH-7600S-BAA

No.	PARTS CODE	PARTS NAME	QTY	MATERIAL/SIZE	REMARKS
1	100148001	CASE,PANEL REAR	1		
2	065045101	SWITCH ASS.	1		
3	065045201	KEY,STOP SWITCH	1		
4	065040201	POWER RIGHT	1		
5	065040301	VOLTMETER	1		
6	065040401	POSTIVE TERMINAL	1		
7	065040501	NEGATIVE TERMINAL	1		
8	065040601	GROUNDING TERMINAL COMBINATION	1		
9	065043201	DUPLEX RECEPTACLE	1		
10	065043201	DUPLEX RECEPTACLE	1		
11	065049101	SINGLE-SRAGE CIRCUIT BREAKERS	1		
12	065040901	CIRCUIT BREAKER 20 AMP 1 POLE	1		
13	100000501	SCREW	4		
14	065041101	RECTIFIER BRIDGE	1		
15	100145701	BAND	1		
16	065041201	WASHER	3		
17	065041301	WASHER,SPRING	3		
18	065041401	SCREW	3		
19	100148101	PANEL,CONTROL,ASSY.	1		
20	100148201	CIRCUIT BREAKER 20APM 1 POLE	2		

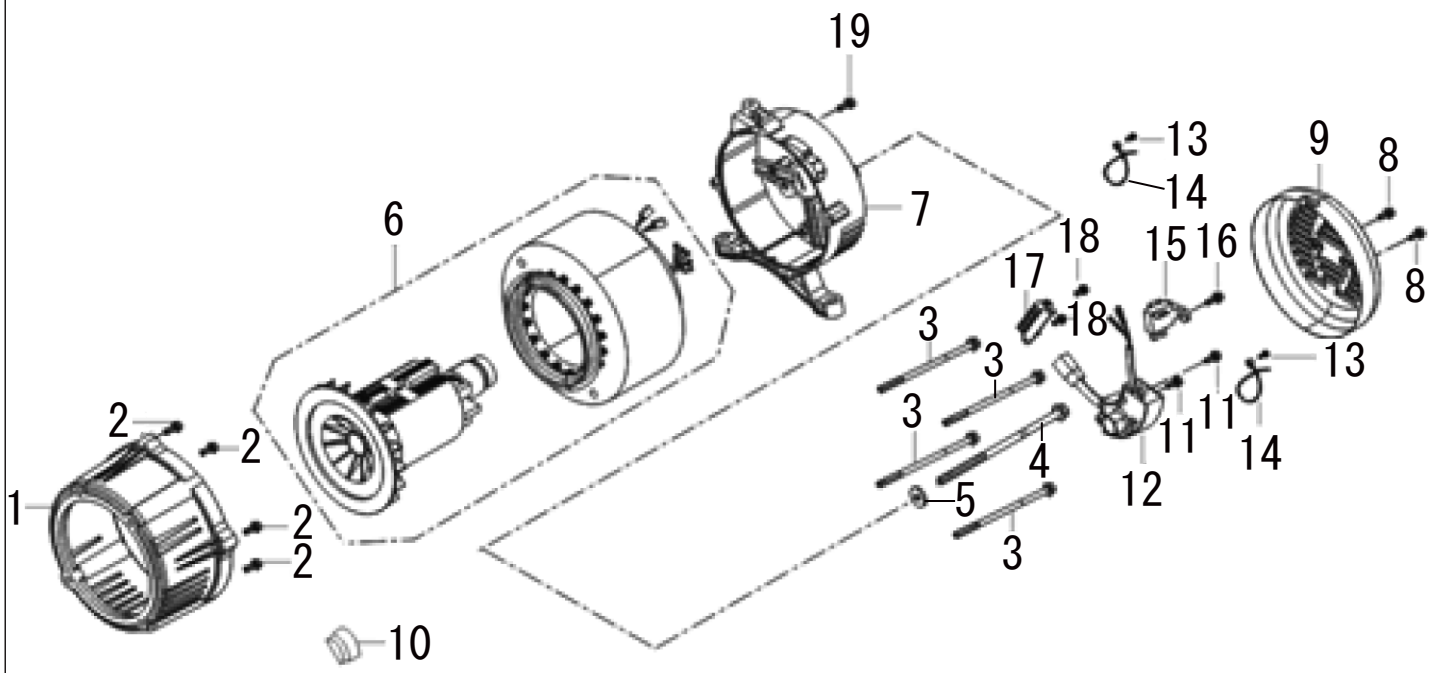
19
13
9
8
14
7
6
18
15
16
17
8
18
3
3
13
3
11
11
2
2
4
14
12
1
5
2
3
2
10

4 ROTOR/STATOR

GVH-7600S-BAA

No.	PARTS CODE	PARTS NAME	QTY	MATERIAL/SIZE	REMARKS
1	100145901	END COVER	1		
2	100146001	BOLT	4		
3	100146101	BOLT,STATOR	4		
4	100146201	BOLT,ROTOR	1		
5	100146301	WASHER	1		
6	100148301	MOTOR ASSY.	1		
7	065046601	BRACKET,MOTOR	1		
8	100005901	BOLT	2	M5X12	
9	065047301	COVER,MOTOR TAIL	1		
10	065045901	STOPPER,MOTOR RIGHT COVER	1		
11	100111401	BOLT	2		
12	065047101	REGULATOR,VOLTAGE	1		
13	100111401	BOLT	2		
14	065047201	BANK	2		
15	065046301	BRUSH SUBASSEMBLY,CARBON	1		
16	100111401	BOLT	1		
17	100146501	BLOCK,TERMINAL	1		
18	100111401	BOLT	2		
19	100005901	BOLT	1	M5X12	

5 WHEEL ASSY,FRONT/TUBE,HANDLE

GVH-7600S-BAA

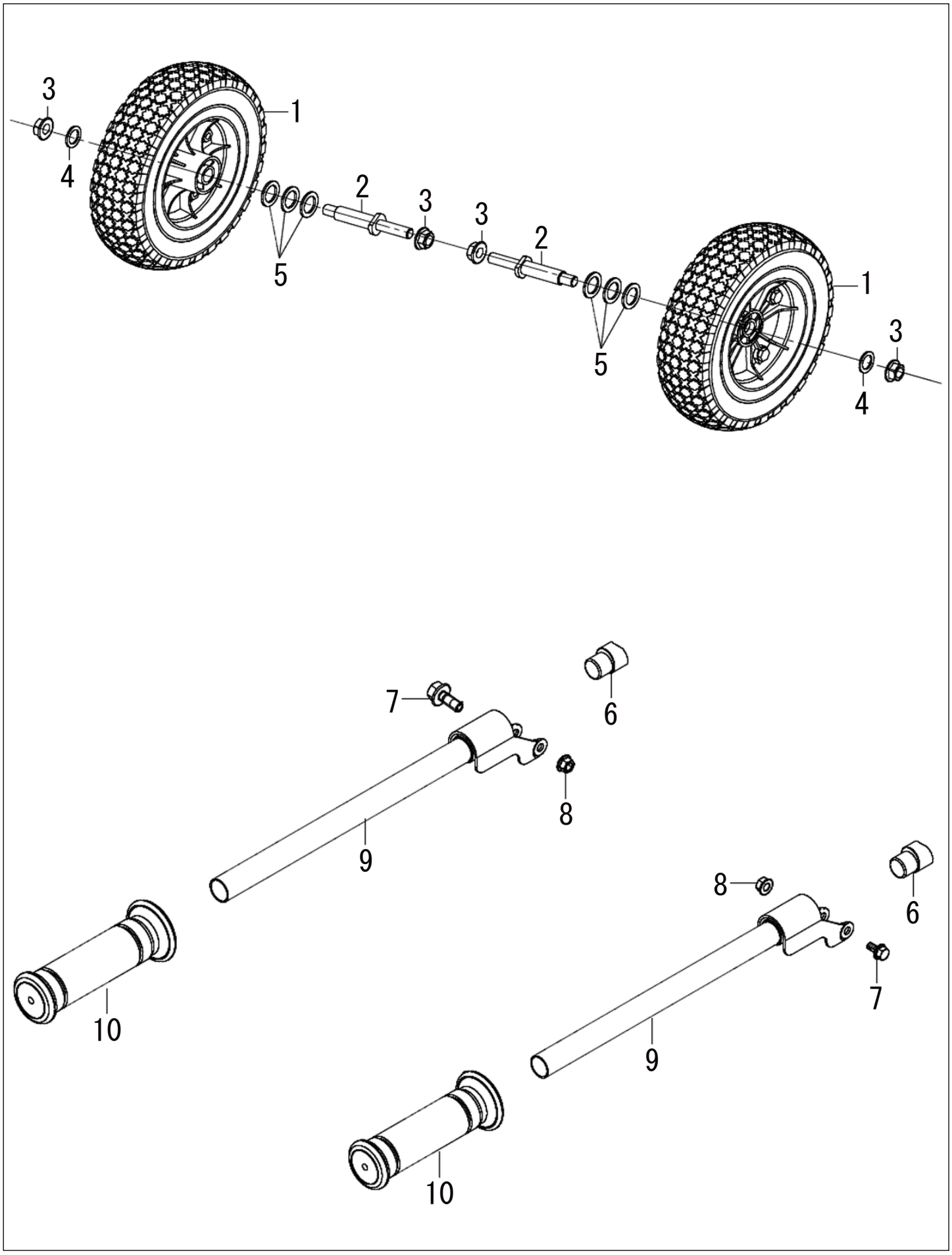

5 WHEEL ASSY,FRONT/TUBE,HANDLE

GVH-7600S-BAA

No.	PARTS CODE	PARTS NAME	QTY	MATERIAL/SIZE	REMARKS
1	065047602	WHEEL,FRONT	2		
2	065047701	SHAFT,FRONT WHEEL	2		
3	065047801	NUT	4		
4	065047901	WASHER	2		
5	065048001	WASHER	6		
6	100146601	CUSHION RUBBER	2		
7	065048201	BOLT	2		
8	065048301	NUT	2		
9	065048401	TUBE,HANDLE	2		
10	065048501	SLEEVE,HANDLE RUBBER	2		